84302

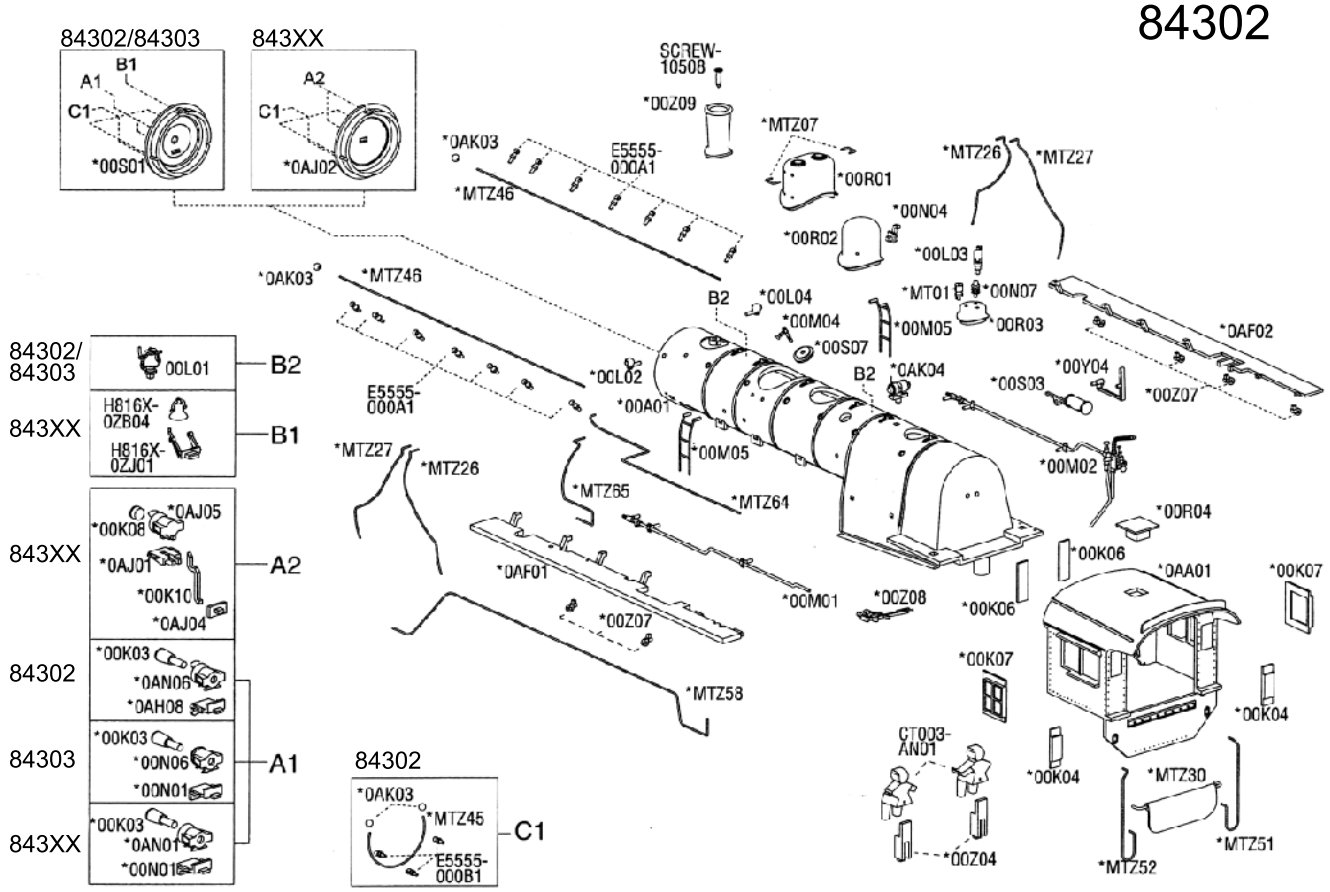
84302/84303
843XX
B1
A1
C1
*00S01
A2
C1
*0AJ02
SCREW-10508
*00Z09
*MTZ07
*0AK03
E5555-000A1
*MTZ46
*00R01
*MTZ26
*MTZ27
*00N04
*00R02
*00L03
*0AK03
*MTZ46
B2
*00L04
*MT01
*00N07
*00M04
*00M05
*00R03
*00S07
*0AF02
84302/84303
00L01
B2
*00L02
B2
*0AK04
*00Y04
E5555-000A1
*00A01
*00S03
*00Z07
843XX
H816X-0ZB04
H816X-0ZJ01
B1
*00M05
*00M02
*MTZ27
*MTZ26
*MTZ65
*MTZ64
*00R04
843XX
*0AJ05
*00K08
*0AJ01
*00K10
*0AJ04
A2
*0AF01
*00K06
*0AA01
*00K07
*00M01
*00Z08
*00K06
*00Z07
84302
*00K03
*0AN06
*0AH08
*00K07
*MTZ58
*00K04
84303
*00K03
*00N06
*00N01
A1
CT003-AN01
*00K04
*MTZ30
843XX
*00K03
*0AN01
*00N01
*00Z04
*MTZ51
*MTZ52
84302
*0AK03
*MTZ45
E5555-000B1
C1

84303

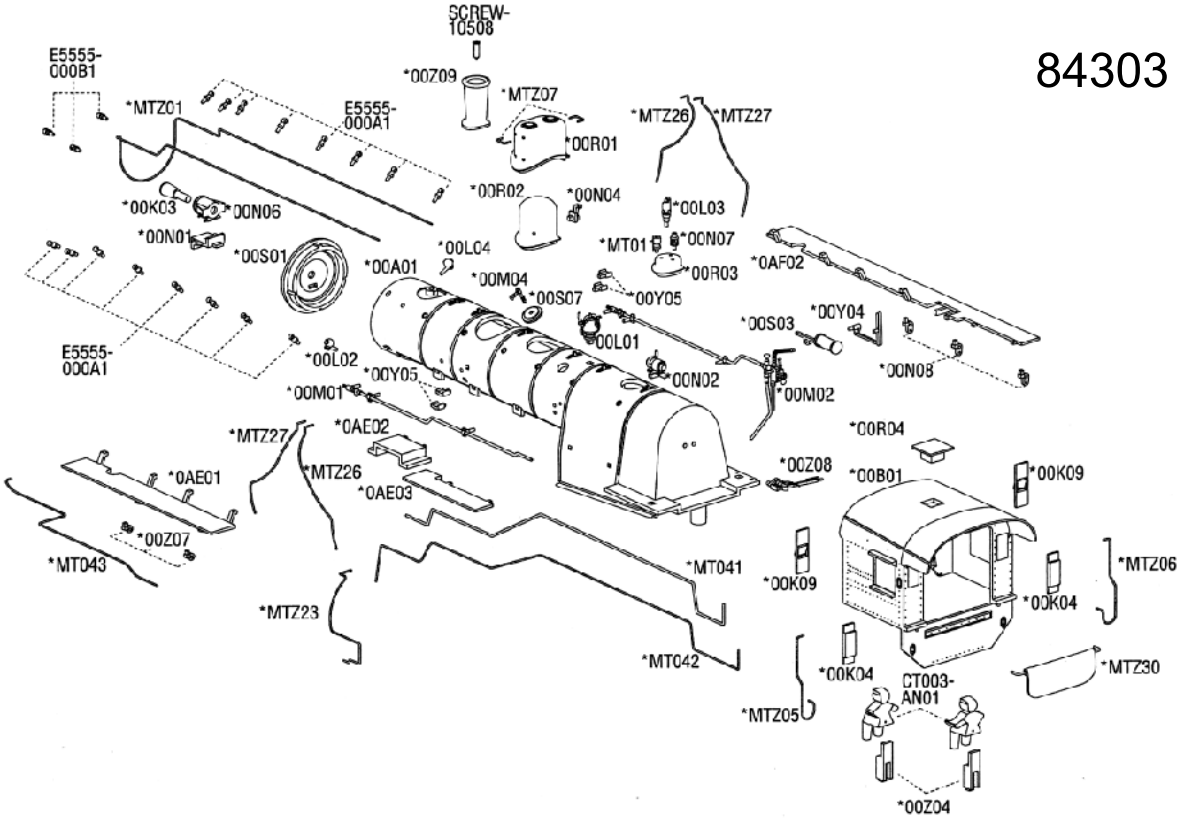
SCREW-10508
E5555-000B1
*00Z09
*MTZ07
*MTZ01
E5555-000A1
*MTZ26
*MTZ27
*00R01
*00R02
*00N04
*00K03
*00N06
*00L03
*00N01
*00S01
*00L04
*MT01
*00N07
*00A01
*00R03
*0AF02
*00M04
*00S07
*00Y05
*00Y04
*00S03
*00L01
E5555-000A1
*00L02
*00Y05
*00N02
*00N08
*00M01
*00M02
*MTZ27
*0AE02
*00R04
*0AE01
*MTZ26
*00Z08
*00B01
*00K09
*0AE03
*00Z07
*MT043
*MT041
*00K09
*MTZ06
*MTZ23
*00K04
*MT042
*00K04
*MTZ30
CT003-AN01
*MTZ05
*00Z04

843XX

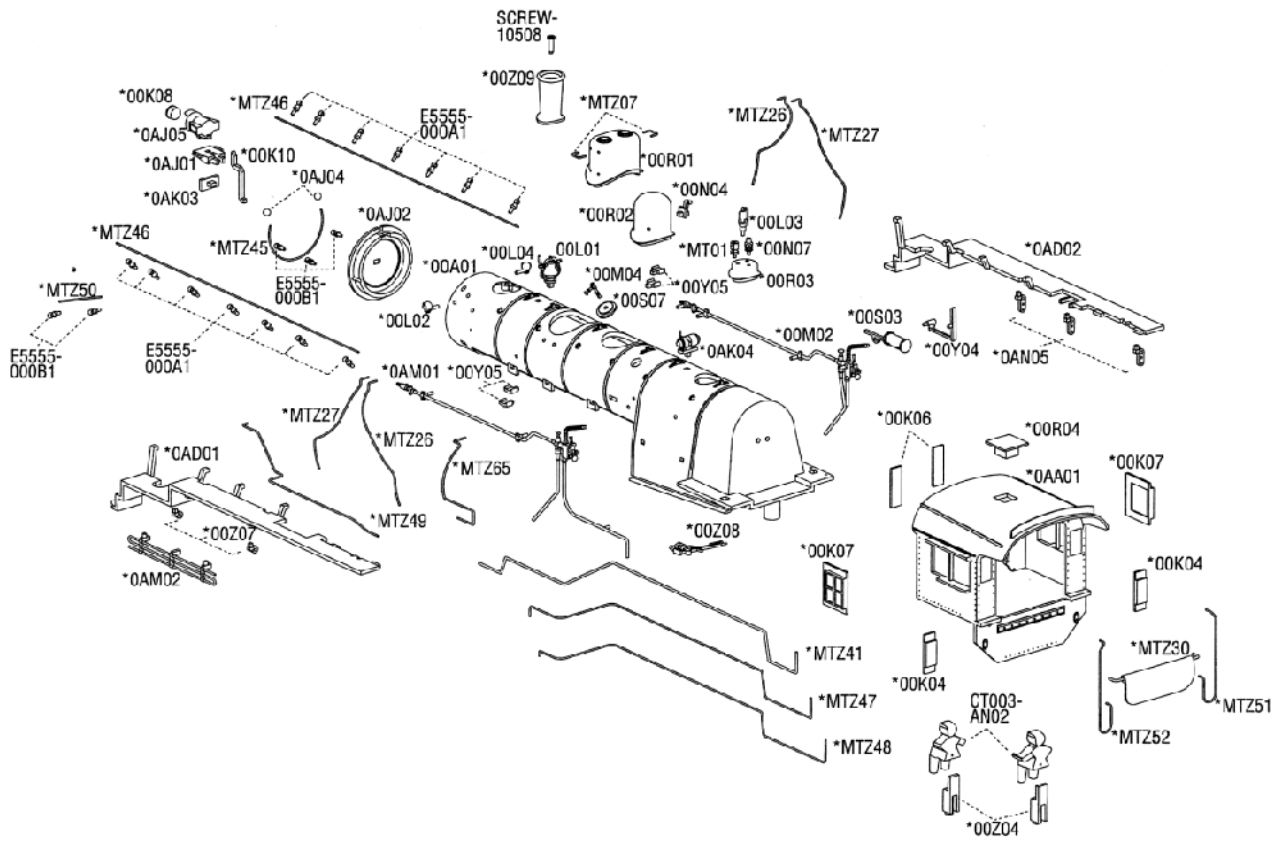
SCREW-10508
*00Z09
*00K08
*MTZ46
E5555-000A1
*MTZ07
*MTZ26
*MTZ27
*0AJ05
*0AJ01
*00K10
*00R01
*0AJ04
*0AK03
*00N04
*00R02
*00L03
*0AJ02
*MTZ46
*MTZ45
*00L04
00L01
*MT01
*00N07
*0AD02
*00A01
*00M04
*00Y05
00R03
*MTZ50
E5555-000B1
*00S07
*00L02
*00S03
*00M02
*00Y04
*0AN05
E5555-000B1
E5555-000A1
*0AK04
*0AM01
*00Y05
*MTZ27
*MTZ26
*00K06
*00R04
*CAD01
*MTZ65
*0AA01
*00K07
*MTZ49
*00Z07
*00Z08
*00K07
*00K04
*0AM02
*MTZ41
*MTZ30
*00K04
*MTZ47
CT003-AN02
MTZ51
*MTZ48
*MTZ52
*00Z04

843XX

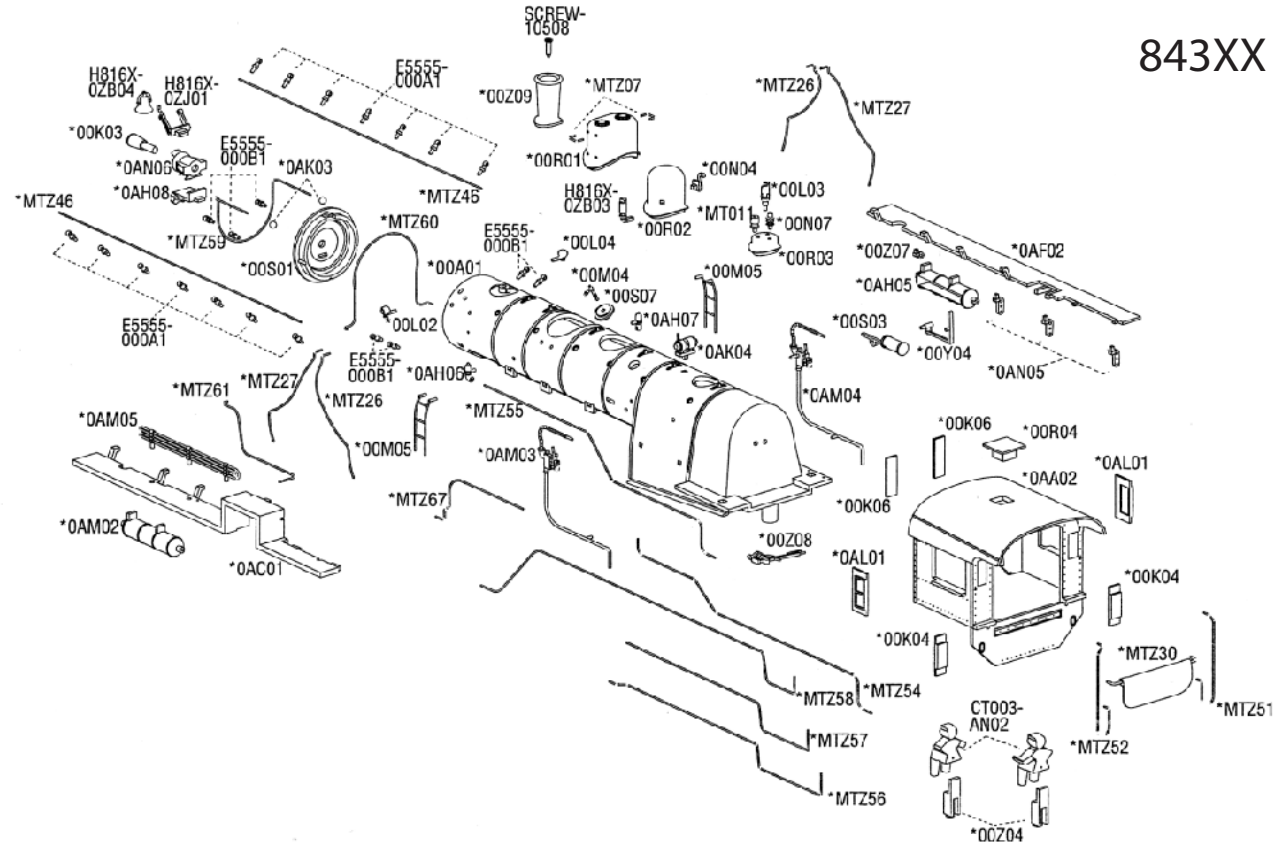
SCREW-10508
H816X-0ZB04
H816X-CZJ01
E5555-000A1
*00Z09
*MTZ07
*MTZ26
*MTZ27
*00K03
E5555-000B1
*0AN06
*0AK03
*00R01
*00N04
*0AH08
*MTZ46
*MTZ45
H816X-0ZB03
*00L03
*MTZ60
*00R02
*MT01
*00N07
*MTZ59
E5555-000B1
*00L04
*00Z07
*0AF02
*00S01
*00A01
*00M04
*00M05
*00R03
*0AH05
*00S07
*0AH07
*00S03
E5555-000A1
*00L02
*0AK04
*00Y04
E5555-000B1
*0AH06
*0AN05
*MTZ61
*MTZ27
*MTZ26
*MTZ55
*CAM04
*0AM05
*00M05
*0AM03
*00K06
*00R04
*0AA02
*0AL01
*MTZ67
*00K06
*0AM02
*00Z08
*0AL01
*0AC01
*00K04
*00K04
*MTZ30
*MTZ58
*MTZ54
*MTZ51
CT003-AN02
*MTZ57
*MTZ52
*MTZ56
*00Z04

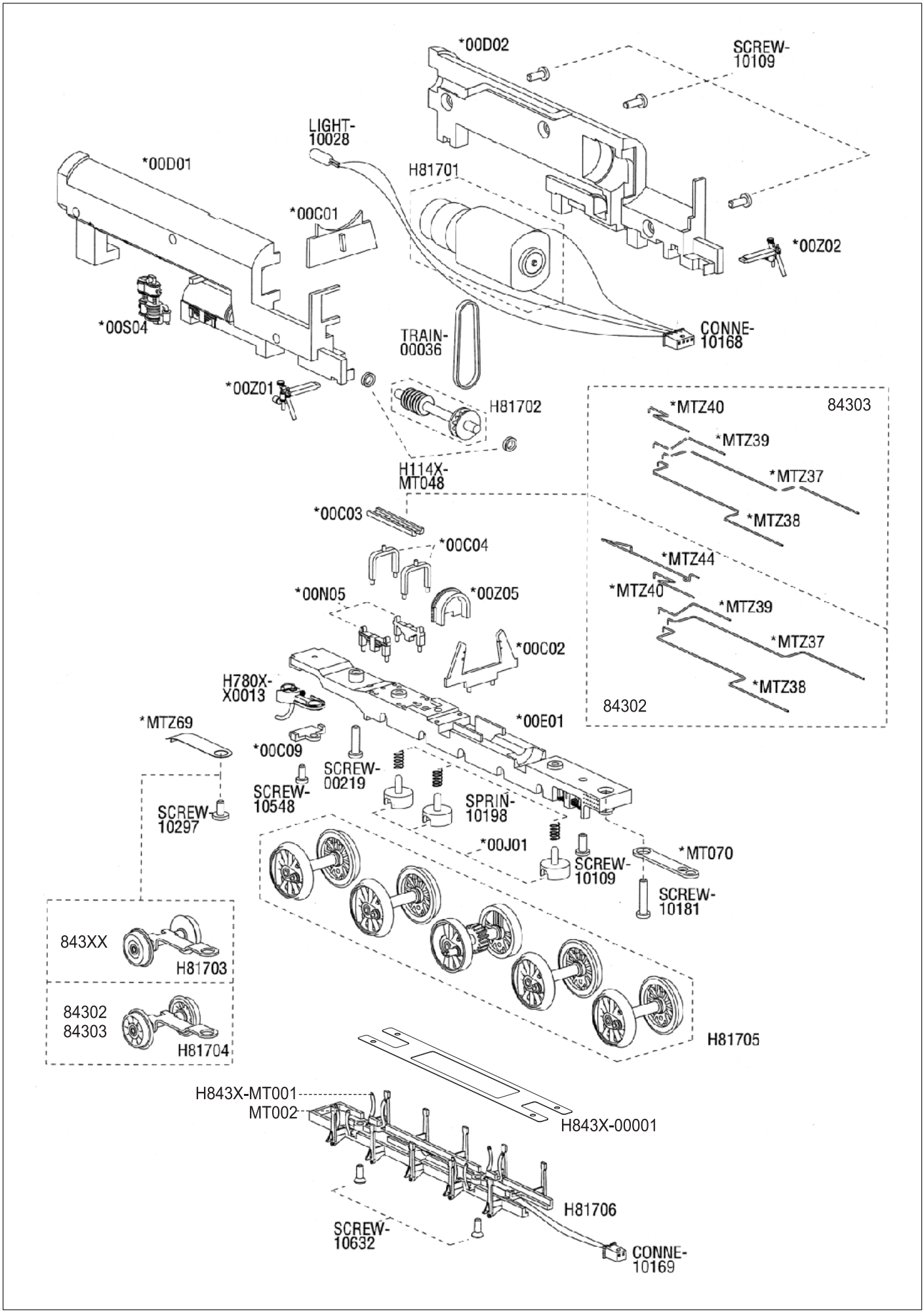
*00D02
SCREW-10109
LIGHT-10028
*00D01
H81701
*00C01
*00Z02
*00S04
TRAIN-00036
CONNE-10168
*00Z01
H81702
84303
*MTZ40
*MTZ39
*MTZ37
*MTZ38
H114X-MT048
*00C03
*00C04
*MTZ44
*MTZ40
*MTZ39
*MTZ37
*MTZ38
84302
*00N05
*00Z05
*00C02
H780X-X0013
*00E01
*MTZ69
*00C09
SCREW-00219
SCREW-10548
SPRIN-10198
SCREW-10297
*00J01
SCREW-10109
*MT070
SCREW-10181
843XX
H81703
84302
84303
H81704
H81705
H843X-MT001
MT002
H843X-00001
H81706
SCREW-10632
CONNE-10169

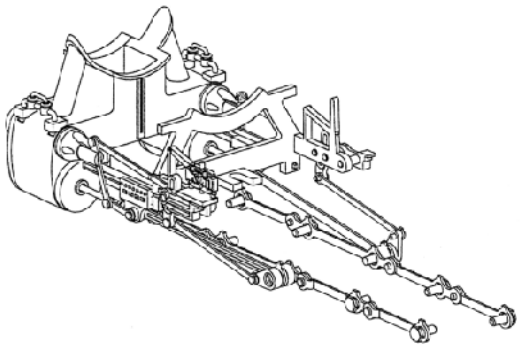

CYLINDER & VALVE GEAR ASSEMBLY

84302
84303

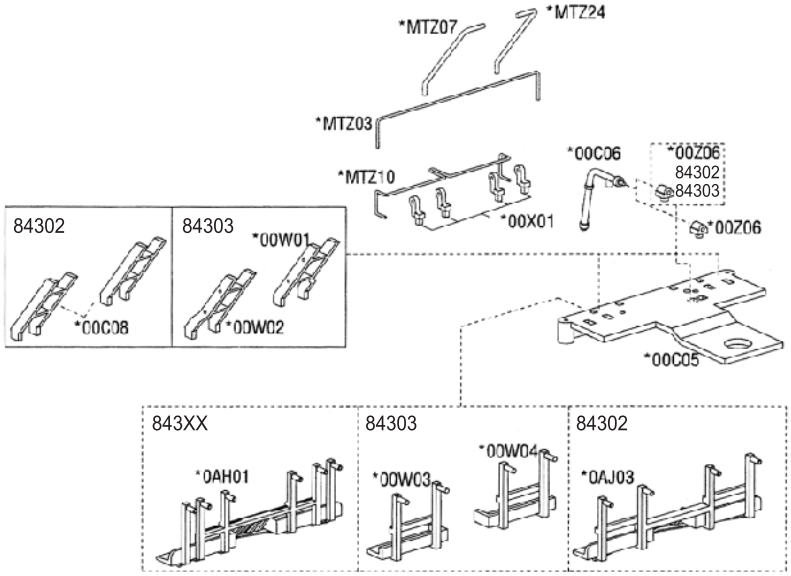

84303

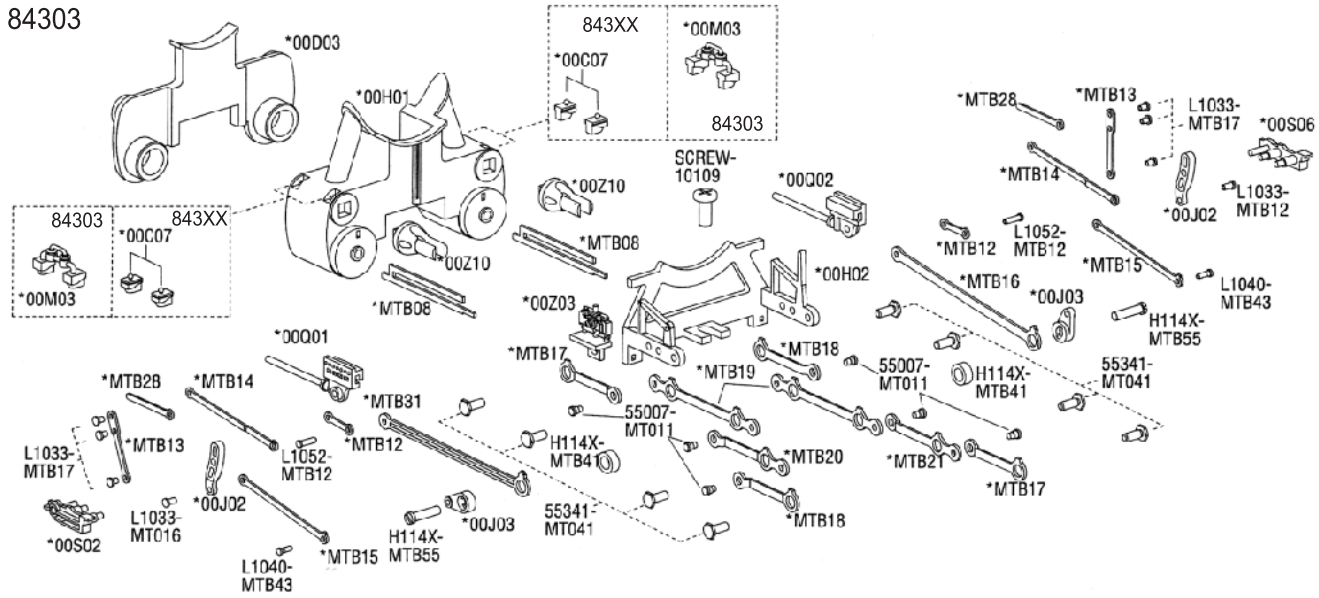

84302

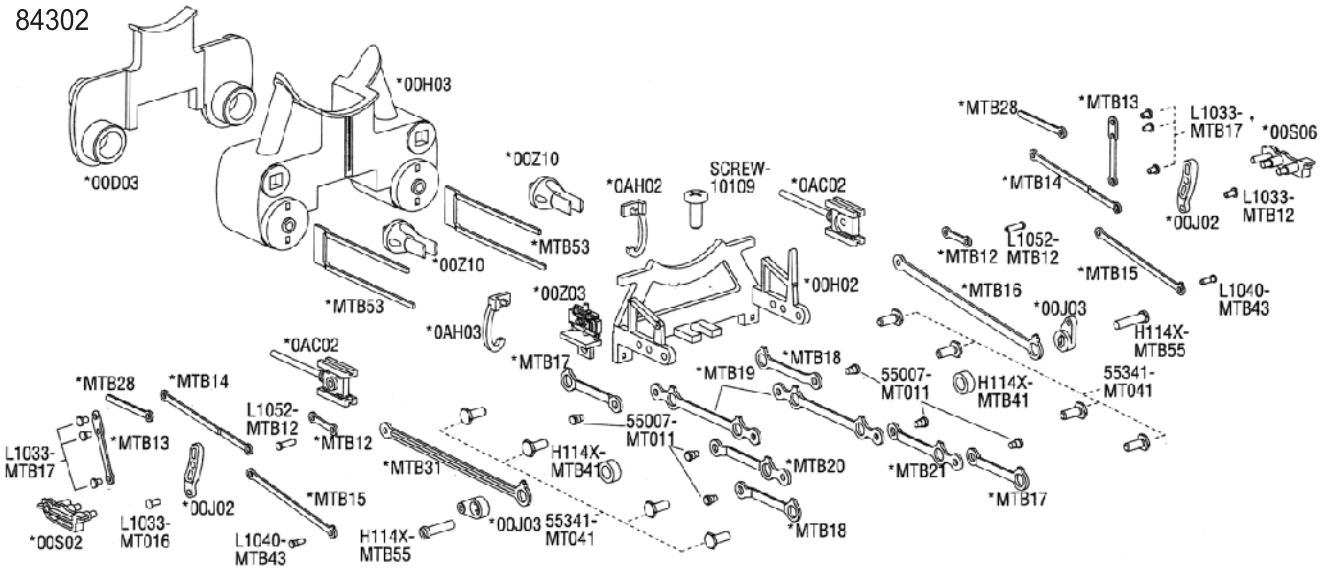

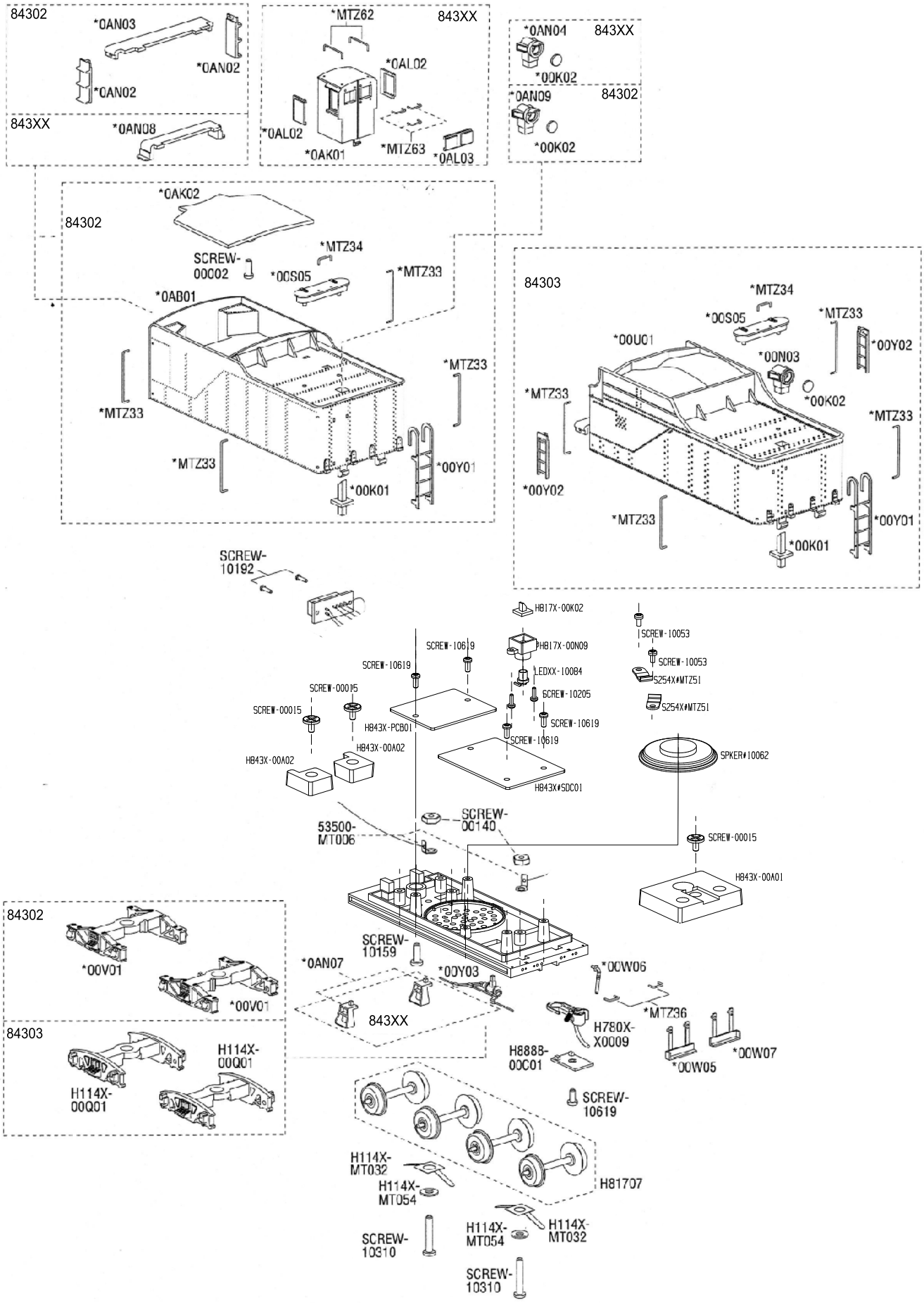
84302
*0AN03
*0AN02
*0AN02
843XX
*0AN08
*MTZ62
843XX
*0AL02
*0AL02
*0AK01
*MTZ63
*0AL03
*0AN04
843XX
*00K02
*0AN09
84302
*00K02
*0AK02
84302
SCREW-00C02
*MTZ34
*00S05
*MTZ33
*0AB01
*MTZ33
*MTZ33
*MTZ33
*00Y01
*00K01
84303
*MTZ34
*00S05
*MTZ33
*00U01
*00Y02
*00N03
*MTZ33
*00K02
*MTZ33
*00Y02
*MTZ33
*00Y01
*00K01
SCREW-10192
H817X-00K02
SCREW-10053
SCREW-10619
H817X-00N09
SCREW-10053
SCREW-10619
LEDXX-10084
S254X#MTZ51
SCREW-00015
SCREW-10205
SCREW-00015
S254X#MTZ51
SCREW-10619
H843X-PCB01
SCREW-10619
H843X-00A02
H843X-00A02
SPKER#10062
H843X#SDC01
SCREW-00140
53500-MT006
SCREW-00015
H843X-00A01
84302
*00V01
*00V01
SCREW-10159
*0AN07
*00Y03
*00W06
843XX
*MTZ36
84303
H780X-X0009
H114X-00Q01
H8888-00C01
*00W07
*00W05
H114X-00Q01
SCREW-10619
H114X-MT032
H81707
H114X-MT054
H114X-MT054
H114X-MT032
SCREW-10310
SCREW-10310