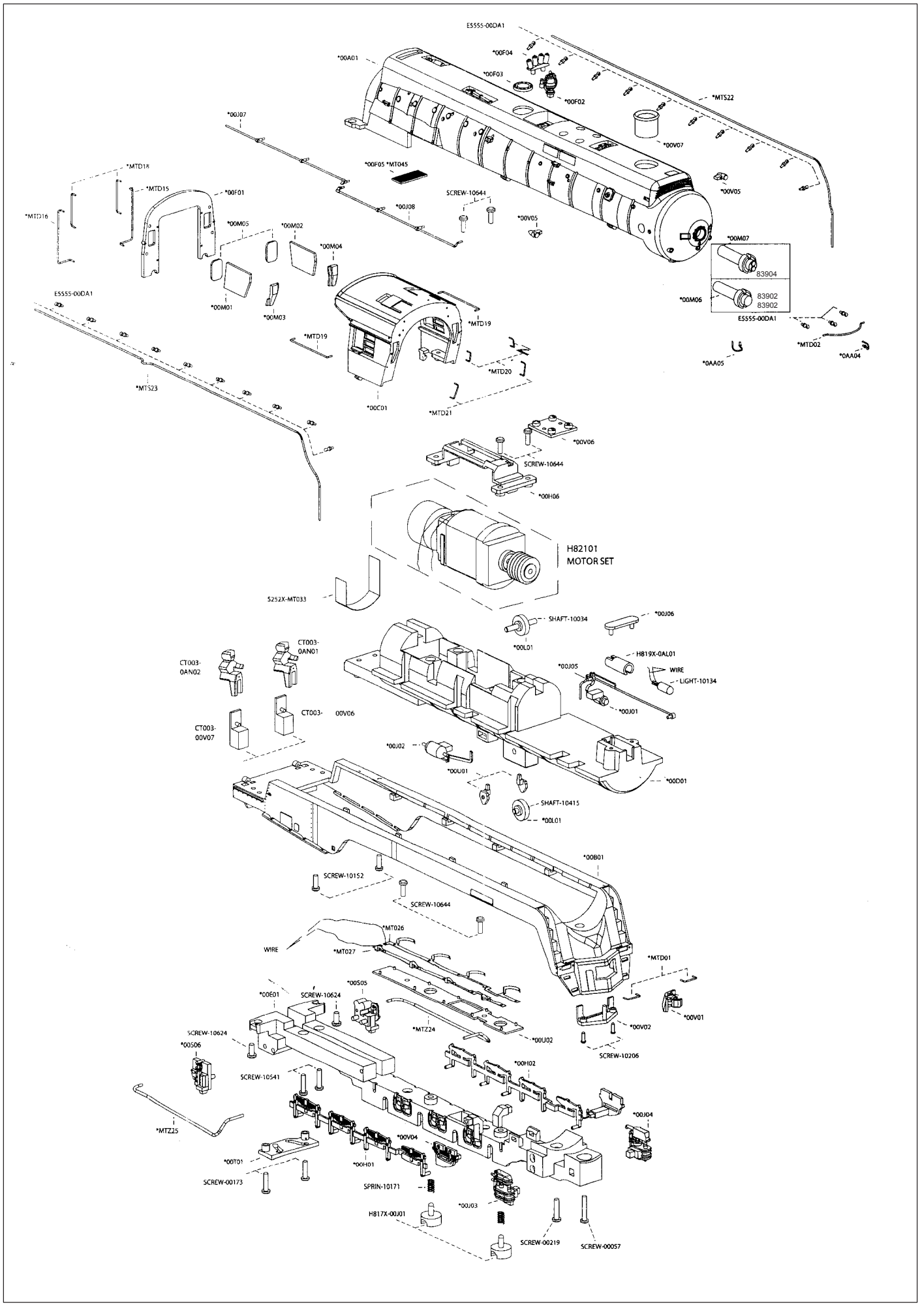
E5555-00DA1
*00A01
*00F04
*00F03
*00F02
*MTS22
*00J07
*00V07
*MTD18
*MTD15
*00F01
*00F05 *MT045
SCREW-10644
*00V05
*MTD16
*00M05
*00M02
*00J08
*00V05
*00M07
*00M04
83904
E5555-00DA1
*00M06
83902
83902
*00M01
*00M03
E5555-00DA1
*MTD19
*MTD19
*MTD02
*0AA05
*0AA04
*MTD20
*MTS23
*00C01
*MTD21
*00V06
SCREW-10644
*00H06
H82101
MOTOR SET
5252X-MT033
SHAFT-10034
*00J06
*00L01
CT003-
0AN01
H819X-0AL01
CT003-
0AN02
*00J05
WIRE
LIGHT-10134
CT003-
00V06
*00J01
CT003-
00V07
*00J02
*00U01
*00D01
SHAFT-10415
*00L01
*00B01
SCREW-10152
SCREW-10644
*MT026
WIRE
*MT027
*MTD01
*00S05
*00E01
SCREW-10624
*00V01
*MTZ24
*00V02
SCREW-10624
*00U02
*00S06
SCREW-10206
*00H02
SCREW-10541
*00J04
*MTZ25
*00V04
*00T01
*00H01
SCREW-00173
SPRIN-10171
*00J03
H817X-00J01
SCREW-00219
SCREW-00057

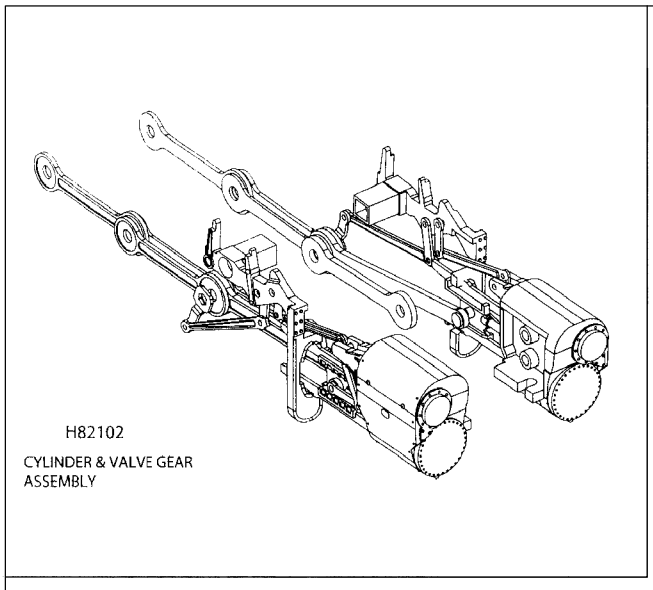
H82102
CYLINDER & VALVE GEAR
ASSEMBLY

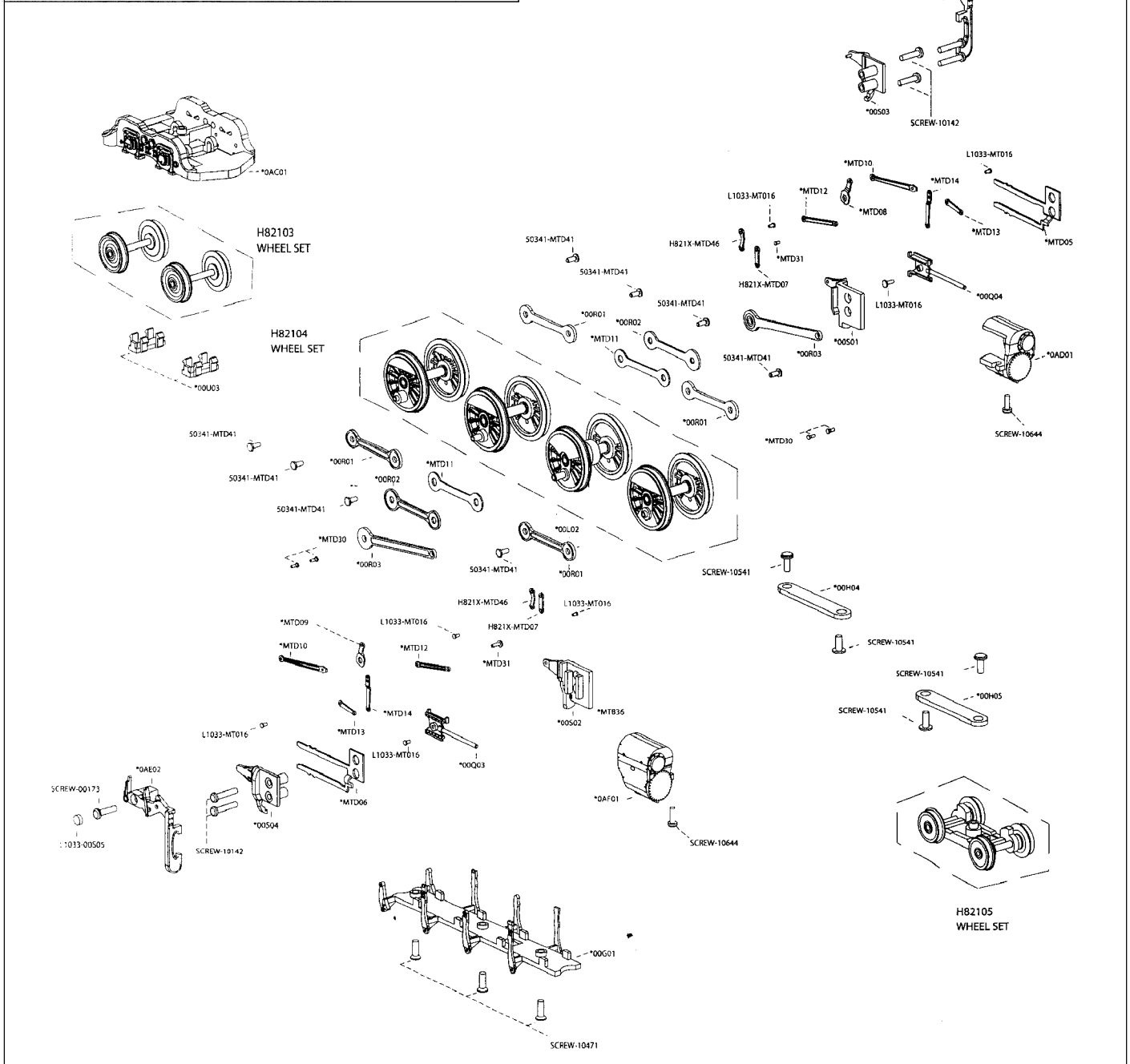
*0AE01
SCREW-00173
L1033-00S05
*00S03
SCREW-10142
*0AC01
H82103
WHEEL SET
H82104
WHEEL SET
*00U03
*MTD10
L1033-MT016
*MTD14
*MTD12
*MTD08
*MTD13
*MTD05
S0341-MTD41
H821X-MTD46
*MTD31
H821X-MTD07
*00Q04
*00R01
*00R02
*MTD11
*00S01
*00R03
*0AD01
SCREW-10644
*MTD30
*00L02
SCREW-10541
*00H04
*MTD09
*MTB36
*00S02
*00H05
*00Q03
*0AE02
*MTD06
*0AF01
*00S04
*00G01
SCREW-10471
H82105
WHEEL SET

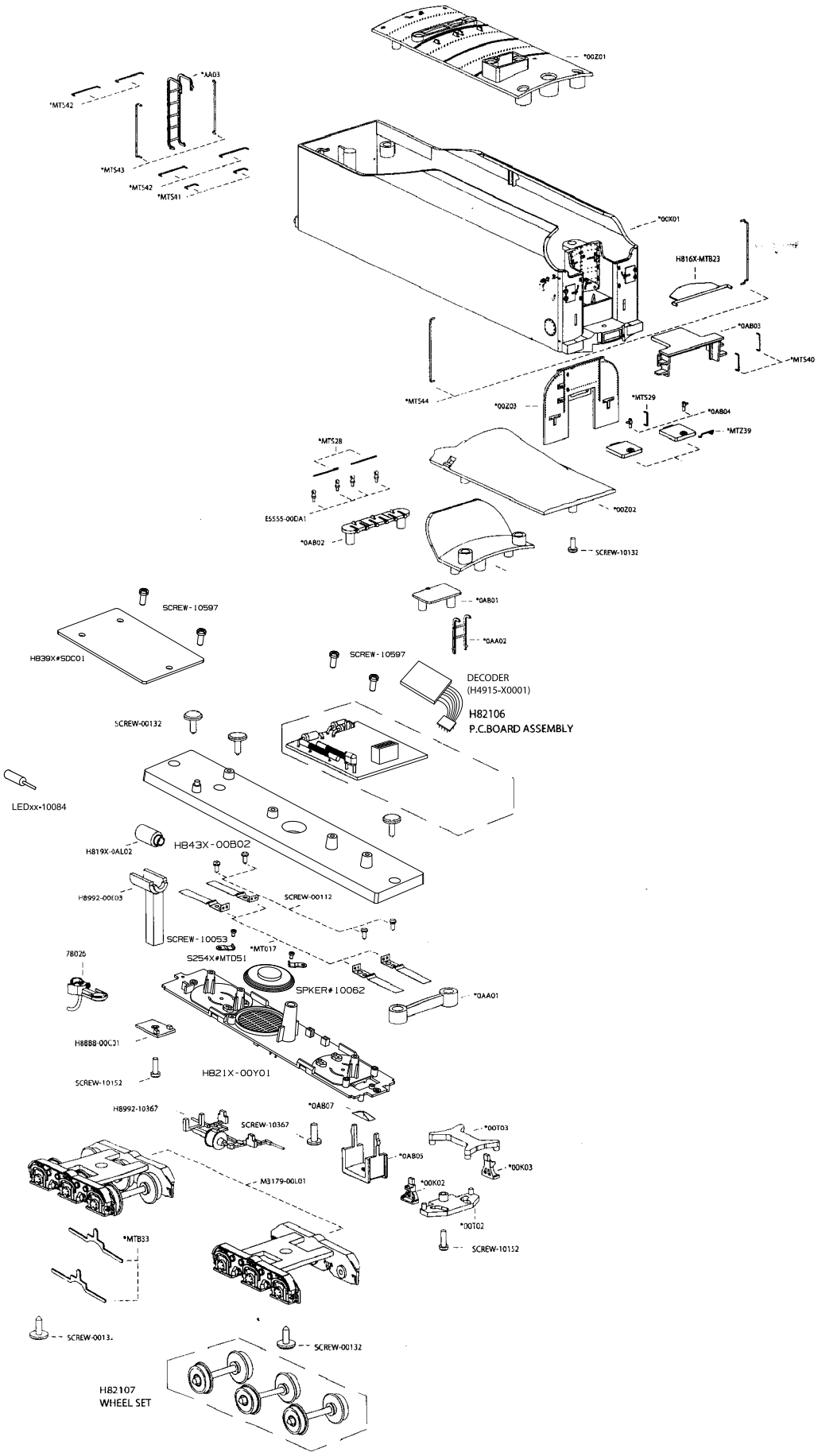
*00Z01
*AA03
*MT542
*MT543
*MT542
*MT541
*00X01
H816X-MTB23
*0AB03
*MT540
*MT544
*00Z03
*MT529
*0AB04
*MTZ39
*MT528
E5555-00DA1
*0AB02
*00Z02
SCREW-10132
*0AB01
*0AA02
SCREW-10597
H839X#SDC01
SCREW-10597
DECODER
(H4915-X0001)
H82106
P.C.BOARD ASSEMBLY
SCREW-00132
LEDxx-10084
H819X-0AL02
H843X-00B02
H8992-00E03
SCREW-00112
SCREW-10053
*MT017
S254X#MTD51
78026
SPKER#10062
*0AA01
H8888-00C01
SCREW-10152
H821X-00Y01
*0AB07
H8992-10367
SCREW-10367
*00T03
*0AB05
*00K03
M3179-00L01
*00K02
*00T02
SCREW-10152
*MTB33
SCREW-0013.
SCREW-00132
H82107
WHEEL SET